DRC

Open-loop Proportional Valve Controller

Enovation Controls reserves the right to improve this product at any time and without notice. This manual may contain mistakes and printing errors. The content is regularly checked and updated. Please check our website or contact our customer support for latest version. Enovation Controls accepts NO liability for technical mistakes or printing errors or their consequence.

Contents

Cautions

Changing setup values or operating modes while a machine is running may cause unintended machine movement. It could lead to possible **injury** or **death**. Any moving parts should be disabled prior to changing setup values or operating modes. In every case, exercise caution and work should be completed only by qualified personnel.

Product Application Guidelines

ALWAYS do the following

- FULLY read this manual and accompanying data sheets BEFORE starting.
- Isolate this unit from all other equipment BEFORE any form of welding.
- Isolate the controller from ANY form of battery charging or battery boosting.
- Be aware of the electrical & mechanical connections, and the expected reactions of the equipment.
- Operate the units within the temperature range.
- Use the correct tools to do the job (i.e. P.C., software) etc.
- Separate High Voltage AC cables from Low Voltage DC signal and supply cables.
- Make sure power supply is CORRECT, ELECTRICALLY CLEAN, STABLE, and rated for the full load.
- Make sure the controller output voltage & current is compatible with the equipment.
- All unused wires / terminals should be terminated safely.
- Ensure ALL connectors have no unintended SHORT or OPEN circuits.
- Ensure ALL connectors are wired correctly, secure, locked in place and fully connected.
- Disconnect or connect wires to or from this unit only when the power supply is disconnected.
- Use adequate screening in areas of intense Radio Frequency fields.
- Ensure ALL work areas are clear of personnel before operating the controller.
- Follow and abide by local and country health & safety standards.

DRC Controllers

The DRC controller drives proportional solenoid valves. The output current is proportional to the command input.

Once configured, the settings are permanently stored in the controller memory.

DRC FEATURES

- Easily configured using Graphical User Interface (GUI) software
- LED indication of power, output current and fault status
- DIN-rail mount housing with removable terminal blocks
- Multiple modes for single and dual coil applications, programmable enable input
- All input and output limits are independently adjustable
- Adjustable output with short circuit protection, adjustable ramp up and ramp down rates

Operating Specifications

Supply Voltage	9 to 32VDC	
Supply Current	Valve current + 50mA (Quiescent Max)	
Output Current	**DRC-x01:** 120mA MAX. per channel **DRC-x06:** 600mA MAX. per channel **DRC-x12:** 1.2A MAX. per channel **DRC-x25:** 2.5A MAX. per channel	
Coil Resistance	2Ω MIN.	
Reference Voltages	+10V, -10V @ 20mA (DRC-Vxx versions only)	
Dither Frequency	30, 50, 75, 100, 125, 150, 175, 200, 225, 250, 275, 300, 1000 Hz	
Analog Input Range	**DRC-Vxx:** -10V to 10V	**DRC-Axx:** 0 to 20mA
Analog Input Impedance	**DRC-Vxx:** 38kΩ	**DRC-Axx:** 250Ω
Operating Temperature Range	-20º to 70º C; -40º to 85º C (storage)	
Enclosure	Polyamide	
Dimensions	Inch: 0.69 W x 4.50 H x 4.30 D; Mm: 17.5 W x 114.5 L x 109.4 H	

Physical Description

There are PWR LED and OUTx LEDs. For DRC-4, there are 5 LEDs. The PWR LED is green when the applied voltage is within the operating range.

OUTx LEDs indicate current output for a given channel. The LEDs are yellow and the brightness will vary with the output current.

In the case of a fault the LEDs will flash red with a flash code. It will continue to flash until clearing faults by moving the command signal out of active range or cycling the power. See Fault Status for details.

The DRC communicates with the Graphical User Interface through the USB port.

When connected to a PC, the DR controller is recognized as a USB device with or without power supply. However, it must be powered when configuring the settings.

User Interface

The DRC has a number of internal settings.

Users can open the Graphical User Interface to view, make changes and save the settings in a data file which can be uploaded to any DRC controller.

Configuration

The GUI has 4 buttons (ran from a PC): Lock, Unlock, Up, and Down. There are short-cut keys: '/'(lock), '*'(unlock), '+'(up), and '-'(down).

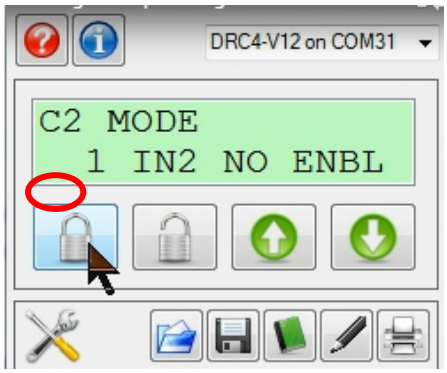

Use the up and down arrows to navigate through the parameter list. The display will show the next parameter in the list when pressed. The parameter name is on the first line and the value is on the second line. The list is in circular, stepping down from the last parameter to the first and vice-versa.

There are three types of parameters: **fixed; monitor; and variable**. **Fixed** parameters show the module's firmware version, etc. **Monitor** parameters display output current and system voltage. Use **variable** parameters to configure the controller, such as maximum output current, operating mode, etc. Some parameters combine variable and monitor in one line. Use it to set a variable according to the current monitor value.

Press the unlock button to enter the edit mode. An asterisk (*) will appear at the beginning of the second line. Use the up and down buttons to change the value. For parameters containing both variable and monitor, the monitor data is in square brackets.

Press the lock button to save the parameters and end edit mode.

When the lock button is pressed, the changes take effect immediately. Change values only when the machine is **NOT** running.

“Read settings from controller” displays a static table of values from non-volatile memory. The changes made to the settings by selecting “lock” are not updated in the table unless “read settings from controller” is selected again.

To save the settings into a file for future use, click “read settings from controller” before clicking “save settings to file”.

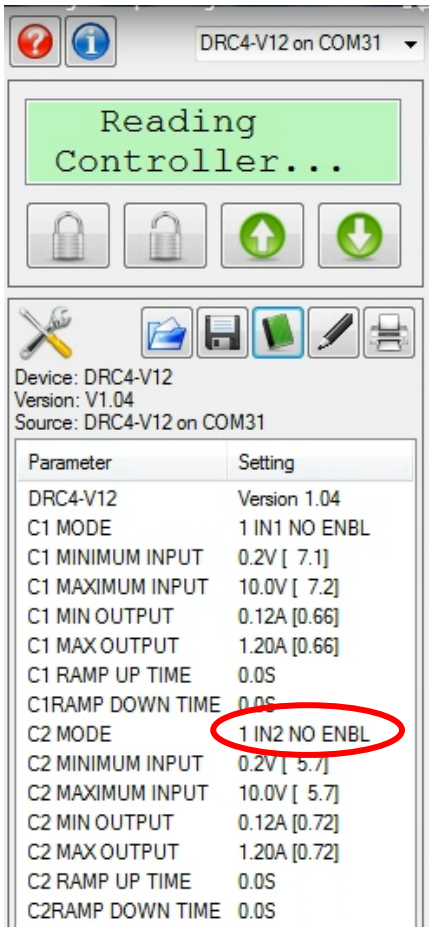

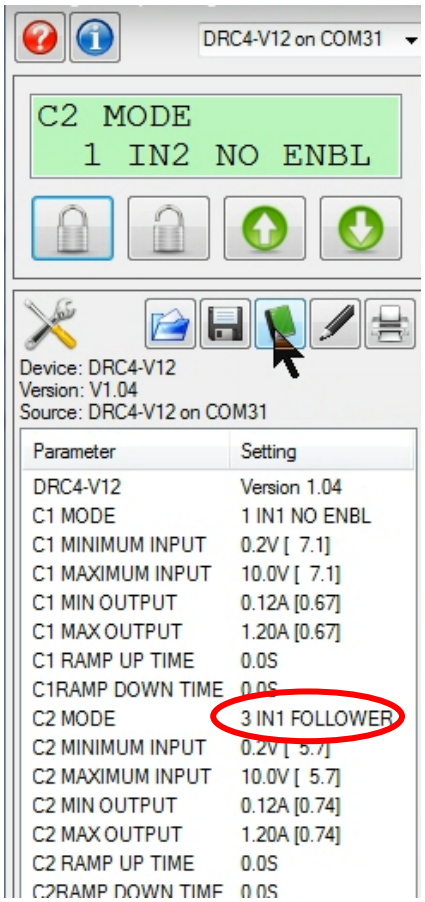

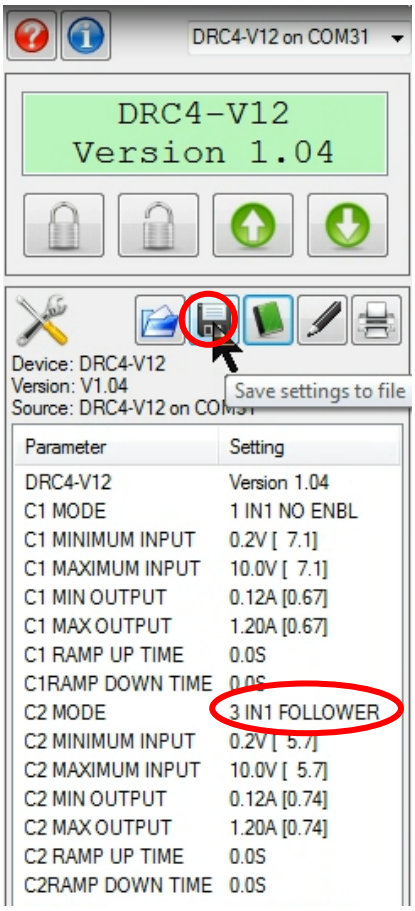

When uploading settings from a data file, the static table shows the settings from the data file, but they are not in the controller yet.

Click “write settings to controller” before clicking “read settings from controller”. After this step, the static table will display the DRC settings from the data file.

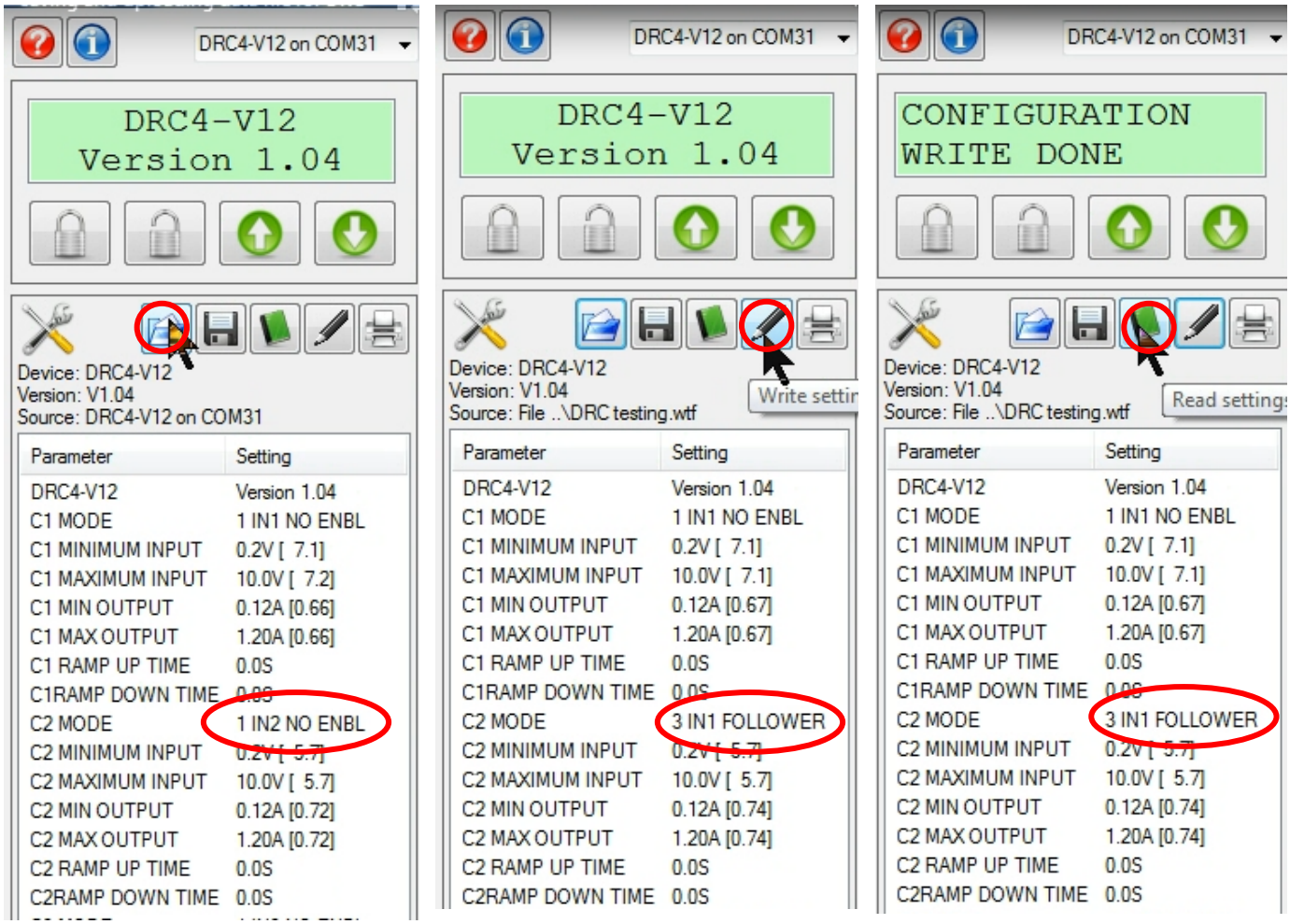

Parameter List

The following table outlines the DRC parameters as well as the limits and units of measure for each parameter.

Parameter	Limits	Units
DRCx-xxx		Version #
C1 Mode	See Mode Description	Mode #
C1 Min input	-10 to +10.0 4 to 20.0	V mA
C1 Max input	-10 to +10.0 4 to 20.0	V mA
C1 Min output	0 to 600[1]	mA
C1 Max output	0 to 600[1]	mA
C1 Ramp up	0.0 to 120.0	Seconds
C1 Ramp down	0.0 to 120.0	Seconds
Previous 7 parameters repeated for all channels2		
Dither frequency	30 to 1000	Hz.
C1 Command input		V (mA)
C1 Output current		mA
Previous 2 parameters repeated for all channels2		
Supply voltage		Volts
Fault status		Fault

[1]0 to 120 mA for **–01A** version, 0 to 1.2 A for **–12A** version, 0 to 2.5 A for **–25A** version

[2]Parameters starting with C1 are repeated for each channel and are displayed as C2 to C4

DRCx-xxx - The title parameter is fixed. It displays the model number and the firmware version.

Cx MODE - Three modes of operation.

Mode	Enable	Channels and description
1 IN1 NO ENBL		1, 2, 3, 4, use its own input.
2 IN1 USE ENBL	x	1, 2, 3, 4, use its own input.
3 IN1 FOLLOWER		2 (use input from C1), 4 (use input from C3)

E.g., to drive two-coil directional proportional valve(s), set C1 & C3 to mode 1 or mode 2, Set C2 & C4 to mode 3. Do not overlap the input ranges.

Cx MIN INPUT - Sets the minimum command input. The input can be inverted. The value in the brackets is the present command input. This parameter is a combination variable/monitor type.

Cx MAX INPUT - Sets the maximum command input. The input can be inverted. The value in the brackets is the present command input. This parameter is a combination variable/monitor type.

Cx MIN OUTPUT - Sets the minimum output current (milliamps for -06A, amps for -12A,-25A). It cannot be inverted. The value in the brackets is the present output current. This parameter is a combination variable/monitor type.

Cx MAX OUTPUT - Sets the maximum output current (milliamps for -06A, amps for -12A,-25A). The value in the brackets is the present output current. This parameter is a combination variable/monitor type.

Cx RAMP UP/DOWN - Sets the time for output current to ramp **Up** or **Down** through the full input range. These parameters are variable.

DITHER FREQ. – Options: 30, 50, 75, 100, 125, 150, 175, 200, 225, 250, 275, 300, and 1000 Hz. Set the PWM or dither frequency according to the valve specifications. This parameter is variable.

Cx COMMAND INPUT - Displays the present input. This parameter is a monitor type.

Cx OUTPUT CURRENT - Displays the present output current. This parameter is a monitor type.

SUPPLY VOLTAGE - Displays the module's power supply voltage. It is helpful for troubleshooting. This parameter is a monitor type.

FAULT STATUS - The STATUS LED will flash red 2 times for Coil Open and 3 times for Coil Short.

Dual-coil valve control: Positive input drives channels 1 and 3, negative input drives channels 2 and 4. Channel 2 uses the input from channel 1. Channel 4 uses the input from channel 3. Ignore the input readings from channels 2 & 4.

10.1V input drives channel 1 output to the max current setting of 0.5A.

10V input drives the channel 3 output to the max current setting of 0.5A.

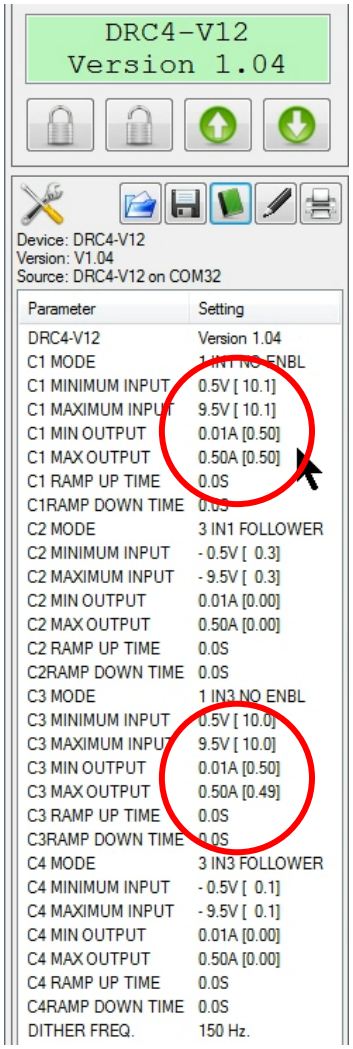

5.8V input drives the channel 1 coil to 0.29A.

0.3V input is in the dead-band, the channel 3 and 4 output current is 0A.

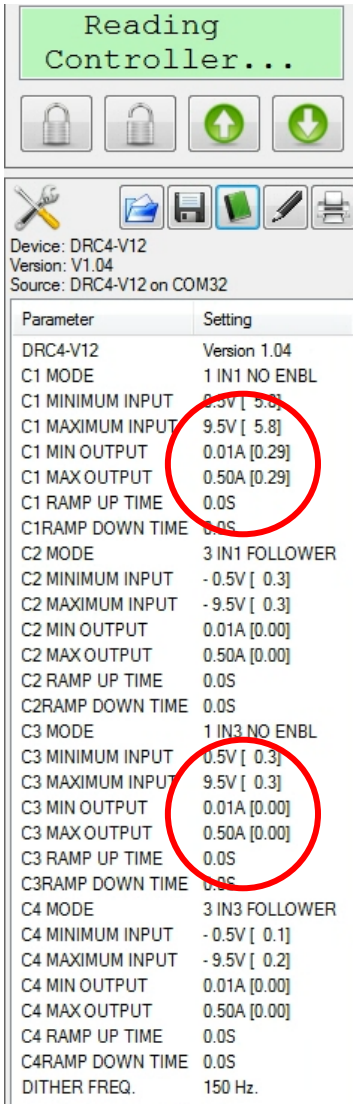

Dual-coil valve control: Positive input drives channels 1 and 3, negative input drives channels 2 and 4. Channel 2 uses the input from channel 1. Channel 4 uses the input from channel 3. Ignore the input readings from channel 3 & 4.

-0.3V input is in the deadband, channel 1 and 2 output current is 0A.

-6.5V input drives channel 4 output to 0.33A.

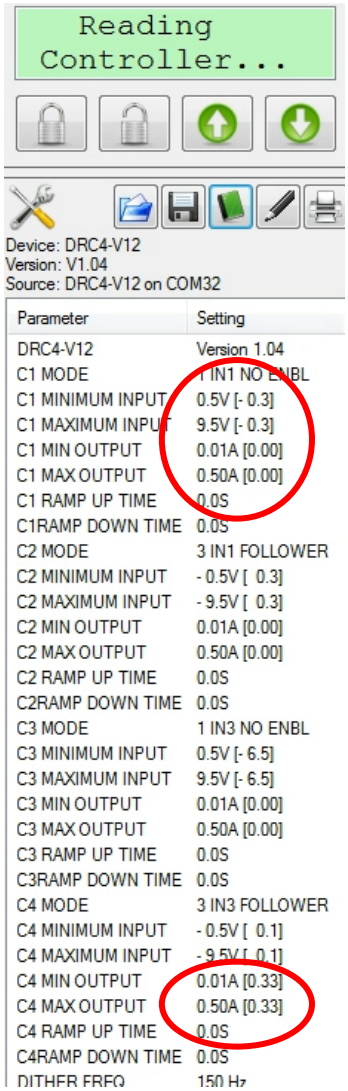

Parameter	Setting
DRC4-V12	Version 1.04
C1 MODE	1 IN1 NO ENBL
C1 MINIMUM INPUT	0.5V [- 0.3]
C1 MAXIMUM INPUT	9.5V [- 0.3]
C1 MIN OUTPUT	0.01A [0.00]
C1 MAX OUTPUT	0.50A [0.00]
C1 RAMP UP TIME	0.0S
C1RAMP DOWN TIME	0.0S
C2 MODE	3 IN1 FOLLOWER
C2 MINIMUM INPUT	- 0.5V [0.3]
C2 MAXIMUM INPUT	- 9.5V [0.3]
C2 MIN OUTPUT	0.01A [0.00]
C2 MAX OUTPUT	0.50A [0.00]
C2 RAMP UP TIME	0.0S
C2RAMP DOWN TIME	0.0S
C3 MODE	1 IN3 NO ENBL
C3 MINIMUM INPUT	0.5V [- 6.5]
C3 MAXIMUM INPUT	9.5V [- 6.5]
C3 MIN OUTPUT	0.01A [0.00]
C3 MAX OUTPUT	0.50A [0.00]
C3 RAMP UP TIME	0.0S
C3RAMP DOWN TIME	0.0S
C4 MODE	3 IN3 FOLLOWER
C4 MINIMUM INPUT	- 0.5V [0.1]
C4 MAXIMUM INPUT	- 9.5V [0.1]
C4 MIN OUTPUT	0.01A [0.33]
C4 MAX OUTPUT	0.50A [0.33]
C4 RAMP UP TIME	0.0S
C4RAMP DOWN TIME	0.0S
DITHER FREQ.	150 Hz.

-7.3V input drives channel 2 output to 0.37A.

-9.5V input drives channel 4 output to 0.49A.

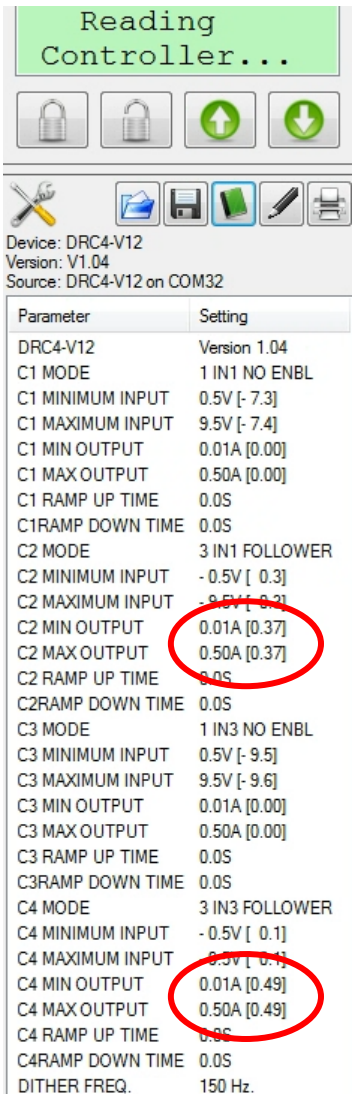

Parameter	Setting
DRC4-V12	Version 1.04
C1 MODE	1 IN1 NO ENBL
C1 MINIMUM INPUT	0.5V [- 7.3]
C1 MAXIMUM INPUT	9.5V [- 7.4]
C1 MIN OUTPUT	0.01A [0.00]
C1 MAX OUTPUT	0.50A [0.00]
C1 RAMP UP TIME	0.0S
C1RAMP DOWN TIME	0.0S
C2 MODE	3 IN1 FOLLOWER
C2 MINIMUM INPUT	- 0.5V [0.3]
C2 MAXIMUM INPUT	- 9.5V [0.3]
C2 MIN OUTPUT	0.01A [0.37]
C2 MAX OUTPUT	0.50A [0.37]
C2 RAMP UP TIME	0.0S
C2RAMP DOWN TIME	0.0S
C3 MODE	1 IN3 NO ENBL
C3 MINIMUM INPUT	0.5V [- 9.5]
C3 MAXIMUM INPUT	9.5V [- 9.6]
C3 MIN OUTPUT	0.01A [0.00]
C3 MAX OUTPUT	0.50A [0.00]
C3 RAMP UP TIME	0.0S
C3RAMP DOWN TIME	0.0S
C4 MODE	3 IN3 FOLLOWER
C4 MINIMUM INPUT	- 0.5V [0.1]
C4 MAXIMUM INPUT	- 9.5V [0.1]
C4 MIN OUTPUT	0.01A [0.49]
C4 MAX OUTPUT	0.50A [0.49]
C4 RAMP UP TIME	0.0S
C4RAMP DOWN TIME	0.0S
DITHER FREQ.	150 Hz.

Wiring

Terminal functions are listed in the table below.

Terminal	Function
J1-1	+V Supply
J1-2	Supply Common
J1-3	Enable Input
J2-1	Output Ch. 1
J2-2	Common
J2-3	Output Ch. 2
J3-1	Output Ch. 3
J3-2	Common
J3-3	Output Ch. 4
J4-1	-10V Reference
J4-2	Common
J4-3	+10V Reference
J5-1	Command Input Ch. 1
J5-2	Common
J5-3	Command Input Ch. 2
J6-1	Command Input Ch. 3
J6-2	Common
J6-3	Command Input Ch. 4

Order Information

The following is a break-down of the DRC part numbering system:

DRC4-V12

01 = 120mA max
06 = 600mA max
12 = 1.2A max
25 = 2.5A max

V = -10 to +10V input
A = 0 to 20mA

= Number of channels (1, 2 or 4)

Required Communication Cables:

For the PC software SAM: PN: 108-00134

Application Examples

Open Loop Single Solenoid Control (DRC1-Vxx)

The DRC can drive a single solenoid with a joystick or potentiometer of 10kΩ.

Mode 1 is used when the enable switch is not used. Mode 2 is used when the enable switch is used.

The command input can be inverted.

Set the dither and output settings according to the valve specifications.

Example Settings

Parameter	Value
C1 Mode	2 IN1 USE ENBL
C1 Min input	0.2 V
C1 Max input	10.0 V
C1 Min output	5 mA
C1 Max output	600 mA
C1 Ramp up	1 S
C1 Ramp down	1 S
Dither frequency	150 Hz.

Schematic

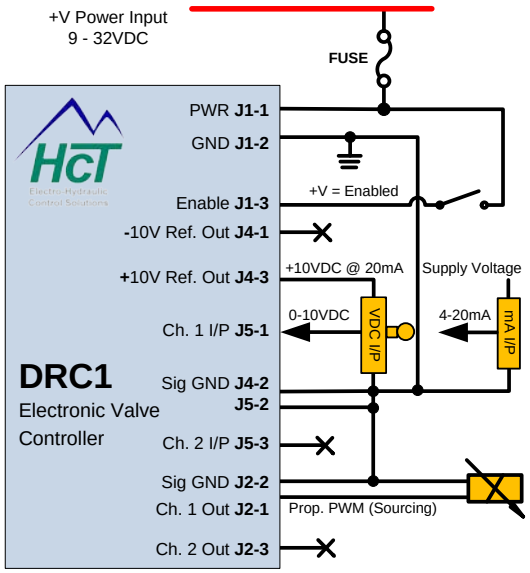

Input / Output Diagram

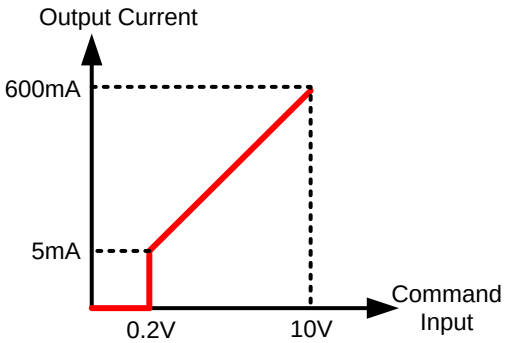

Open Loop Double Solenoid Control (DRC2-Vxx)

The DRC can drive a double solenoid valve with a joystick or potentiometer of 10kΩ.

If enable switch is not used, set channel 1 to be Mode 1, channel 2 to be Mode 3.

If enable switch is used, set channel 1 to be Mode 2, channel 2 to be Mode 3.

The minimum and maximum input parameters for the two channels should not be overlap.

Set the dither and output settings according to the valve specifications.

Schematic

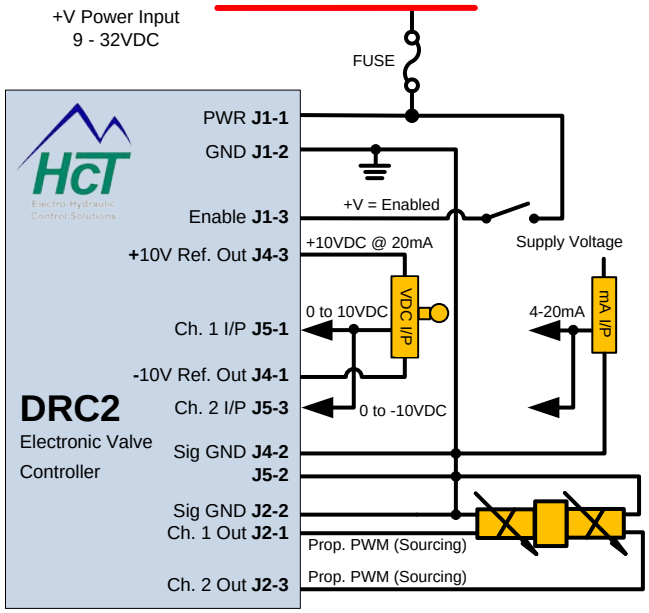

Example Settings

Parameter	Value
C1 Mode	2 IN1 USE ENBL
C1 Min input	0.2 V
C1 Max input	10.0 V
C1 Min output	5 mA
C1 Max output	600 mA
C1 Ramp up	1 S
C1 Ramp down	1 S
C2 Mode	3 IN1 FOLLOWER
C2 Min input	-0.2 V
C2 Max input	-10.0 V
C2 Min output	5 mA
C2 Max output	600 mA
C2 Ramp up	0 S (NOT USED)
C2 Ramp down	0 S (NOT USED)
Dither frequency	150 Hz.

Input / Output Diagram

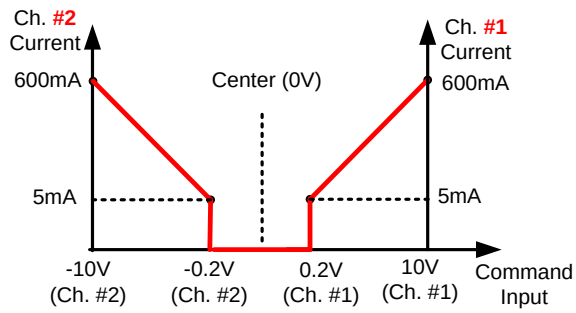

Double/Single/Single Solenoid Control (DRC4-Vxx)

The DRC drives a dual-coil valve with joystick input Pin J5-1 and 2 single-coil valves with joystick input Pin J6-1 and J6-3.

Set the dither and output settings according to the valve specifications.

Schematic

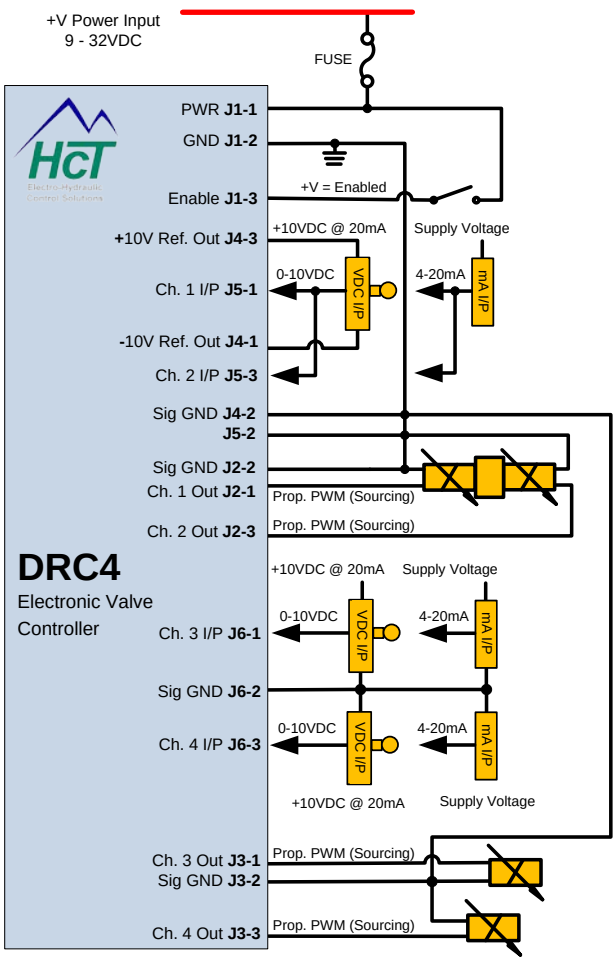

Example Settings

Parameter	Value
C1 Mode	2 IN1 USE ENBL
C1 Min input	0.2 V
C1 Max input	10.0 V
C1 Min output	5 mA
C1 Max output	600 mA
C1 Ramp up	1 S
C1 Ramp down	1 S
C2 Mode	3 IN1 FOLLOWER
C2 Min input	-0.2 V
C2 Max input	-10.0 V
C2 Min output	5 mA
C2 Max output	600 mA
C2 Ramp up	0 S (NOT USED)
C2 Ramp down	0 S (NOT USED)
C3 Mode	2 IN3 USE ENBL
C3 Min input	0.2 V
C3 Max input	10.0 V
C3 Min output	5 mA
C3 Max output	600 mA
C3 Ramp up	1 S
C3 Ramp down	1 S
C4 Mode	2 IN4 USE ENBL
C4 Min input	0.2 V
C4 Max input	10.0 V
C4 Min output	5 mA
C4 Max output	600 mA
C4 Ramp up	1 S
C4 Ramp down	1 S
Dither frequency	150 Hz.

High Country Tek
by Enovation Controls

5311 S 122nd East Ave.
Tulsa, OK 74146
Tel: +1 (918) 317-4100
sales@enovationcontrols.com

www.enovationcontrols.com